Company name:	Nhat Nhung Co., Ltd
Created by:	Tran Dinh Nhat
Phone:	0931770221
Email:	nhatmaybom@gmail.com
Date:	11/09/2018

Position	Qty.	Description
	1	**SL1.100.100.55.A.4.50B.C**

Note! Product picture may differ from actual product

Product No.: 98626289

Non-self-priming, single-stage, centrifugal pump designed for handling wastewater, process water and unscreened raw sewage.

The pump is designed for intermittent and continous operations in submerged installation. The revolutionary S-tube® impeller provides free spherical passage of solids up to 100 mm and is suitable for wastewater with a dry matter content of up to 3 %.

A unique stainless-steel clamp assembling system enables quick and easy disassembly of the pump from the motor unit for service and inspection. No special tools are required. Pipework connection is via a DIN flange.

Controls:

Moisture sensor:	with moisture sensors
Water-in-oil sensor:	with water-in-oil sensor

Liquid:

Pumped liquid:	Any Newtonian liquid
Maximum liquid temperature:	40 °C
Density:	998.2 kg/m³

Technical:

Type of impeller:	S-TUBE
Maximum particle size:	100 mm
Primary shaft seal:	SIC/SIC
Secondary shaft seal:	CARBON/CERAMICS
Approvals on nameplate:	CE, EN12050-1
Curve tolerance:	ISO9906:2012 3B2

Materials:

Pump housing:	Cast iron (EN-GJL-250) EN-GJL-250
Impeller:	Cast iron (EN-GJL-250) EN-GJL-250
Motor:	EN-GJL-250

Installation:

Maximum ambient temperature:	40 °C
Flange standard:	DIN
Pump inlet:	150
Pump outlet:	100
Pressure rating:	PN 10
Maximum installation depth:	20 m

Company name: Nhat Nhung Co., Ltd
Created by: Tran Dinh Nhat
Phone: 0931770221
Email: nhatmaybom@gmail.com
Date: 11/09/2018

Position	Qty.	Description

Electrical data:

Power input - P1:	6.3 kW
Rated power - P2:	5.5 kW
Mains frequency:	50 Hz
Rated voltage:	3 x 400-415 V
Voltage tolerance:	+10/-10 %
Max starts per. hour:	20
Rated current:	12.8-11.2 A
Starting current:	81 A
Cos phi - power factor:	0.85
Cos phi - p.f. at 3/4 load:	0.80
Cos phi - p.f. at 1/2 load:	0.70
Rated speed:	1463 rpm
Motor efficiency at full load:	89.1 %
Motor efficiency at 3/4 load:	89.6 %
Motor efficiency at 1/2 load:	89.0 %
Number of poles:	4
Start. method:	direct-on-line
Enclosure class (IEC 34-5):	IP68
Insulation class (IEC 85):	H
Explosion proof:	no
Length of cable:	10 m
Cable type:	LYNIFLEX

Others:

Net weight:	163 kg

Company name: Nhat Nhung Co., Ltd
Created by: Tran Dinh Nhat
Phone: 0931770221
Email: nhatmaybom@gmail.com
Date: 11/09/2018

98626289 SL1.100.100.55.A.4.50B.C 50 Hz

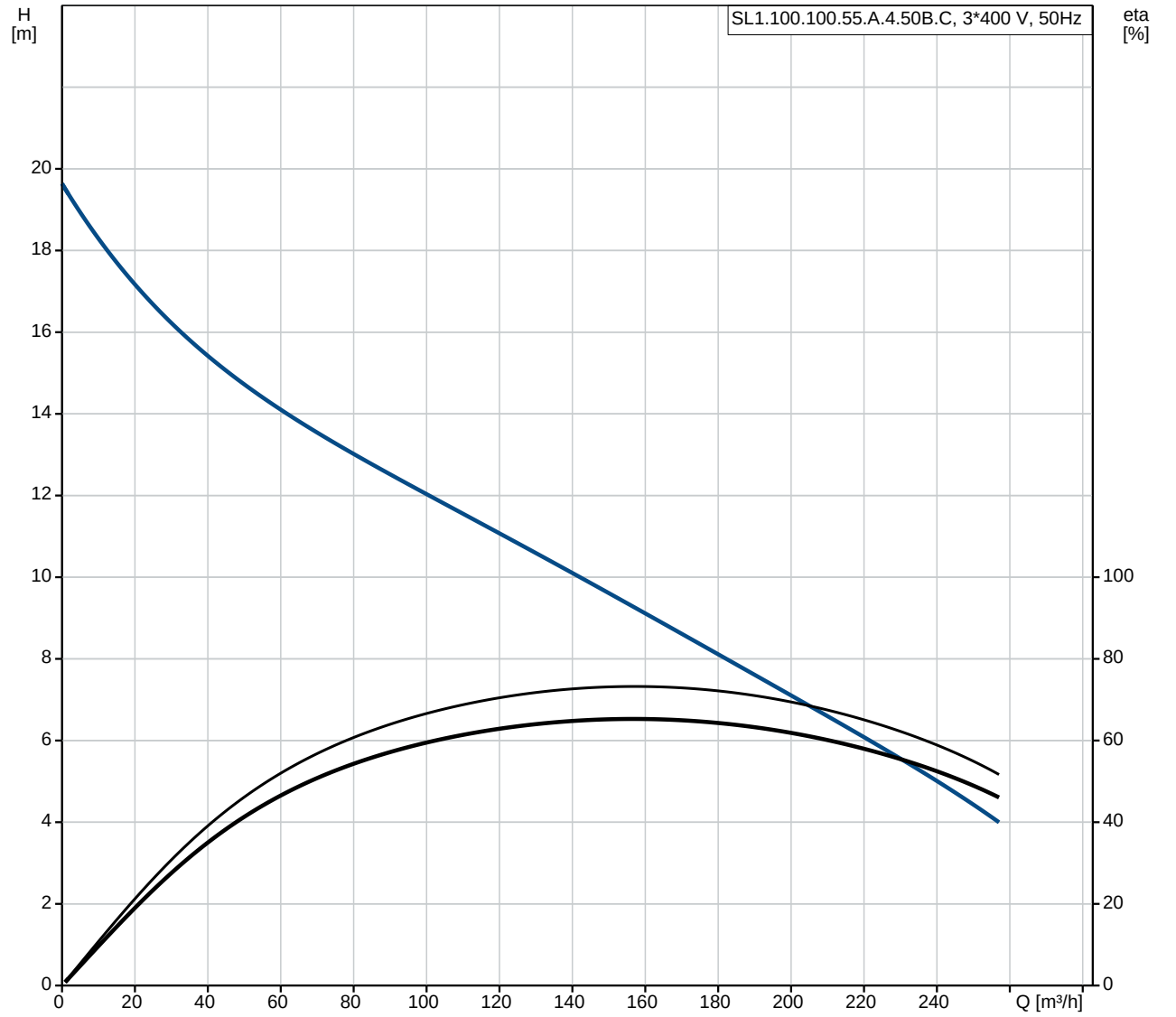

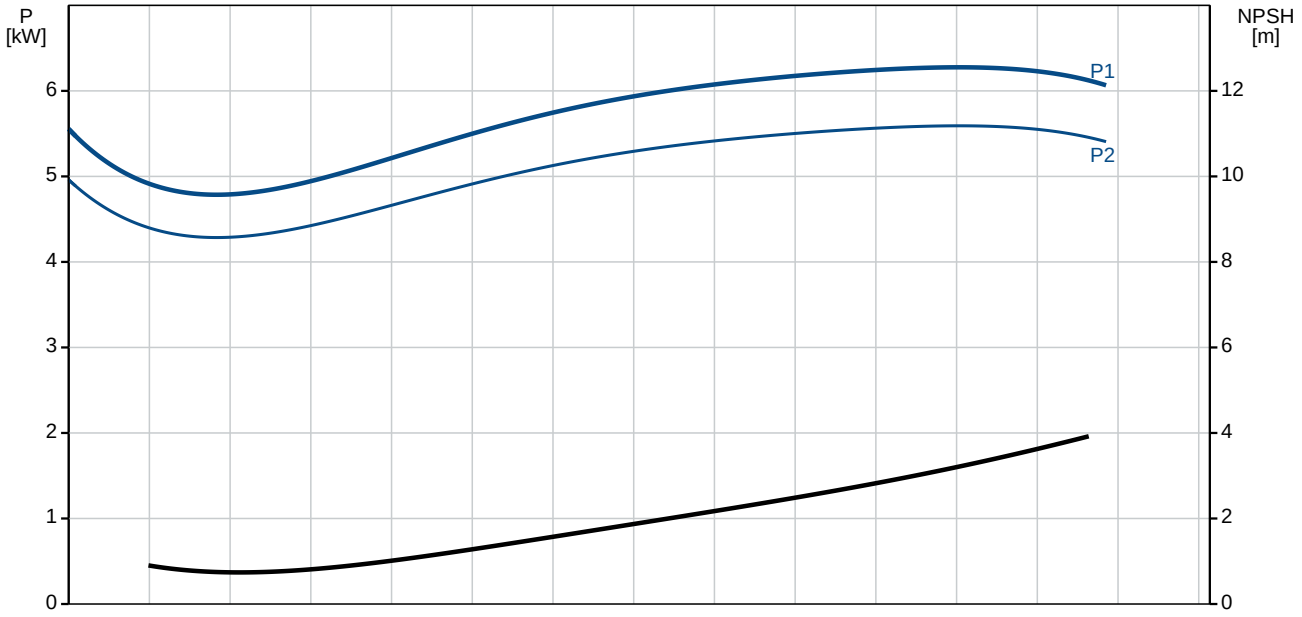

Company name: Nhat Nhung Co., Ltd
Created by: Tran Dinh Nhat
Phone: 0931770221
Email: nhatmaybom@gmail.com
Date: 11/09/2018

Description	Value
General information:	
Product name:	SL1.100.100.55.A.4.50B.C
Product No:	98626289
EAN number:	5711498469716
Technical:	
Max flow:	257 m³/h
Head max:	19.3 m
Type of impeller:	S-TUBE
Maximum particle size:	100 mm
Primary shaft seal:	SIC/SIC
Secondary shaft seal:	CARBON/CERAMICS
Approvals on nameplate:	CE, EN12050-1
Curve tolerance:	ISO9906:2012 3B2
Cooling jacket:	without cooling jacket
Materials:	
Pump housing:	Cast iron (EN-GJL-250)
	EN-GJL-250
Impeller:	Cast iron (EN-GJL-250)
	EN-GJL-250
Motor:	EN-GJL-250
Installation:	
Maximum ambient temperature:	40 °C
Flange standard:	DIN
Pump inlet:	150
Pump outlet:	100
Pressure rating:	PN 10
Maximum installation depth:	20 m
Inst dry/wet:	SUBMERGED
Installation:	Vertical
Liquid:	
Pumped liquid:	Any Newtonian liquid
Maximum liquid temperature:	40 °C
Density:	998.2 kg/m³
Electrical data:	
Power input - P1:	6.3 kW
Rated power - P2:	5.5 kW
Mains frequency:	50 Hz
Rated voltage:	3 x 400-415 V
Voltage tolerance:	+10/-10 %
Max starts per. hour:	20
Rated current:	12.8-11.2 A
Starting current:	81 A
Cos phi - power factor:	0.85
Cos phi - p.f. at 3/4 load:	0.80
Cos phi - p.f. at 1/2 load:	0.70
Rated speed:	1463 rpm
Motor efficiency at full load:	89.1 %
Motor efficiency at 3/4 load:	89.6 %
Motor efficiency at 1/2 load:	89.0 %
Number of poles:	4
Start. method:	direct-on-line
Enclosure class (IEC 34-5):	IP68
Insulation class (IEC 85):	H
Explosion proof:	no
Motor protec:	PTC
Length of cable:	10 m
Cable type:	LYNIFLEX
Controls:	

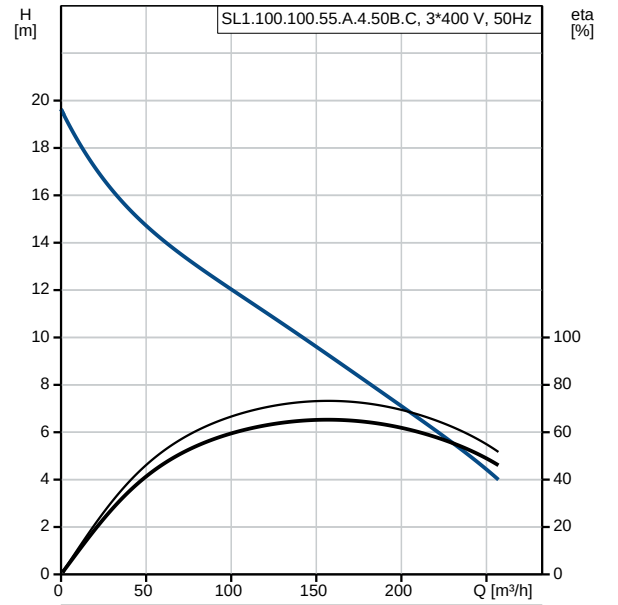

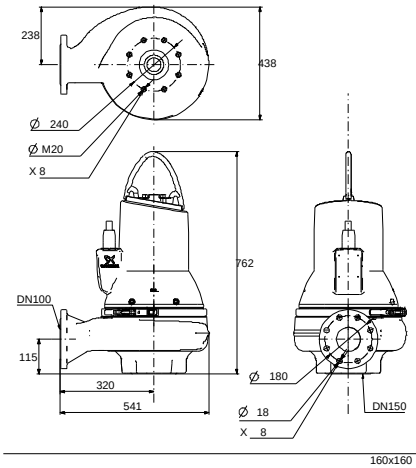

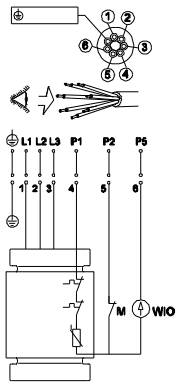

Company name: Nhat Nhung Co., Ltd
Created by: Tran Dinh Nhat
Phone: 0931770221
Email: nhatmaybom@gmail.com
Date: 11/09/2018

Description	Value
Additional I/O:	N
Moisture sensor:	with moisture sensors
Water-in-oil sensor:	with water-in-oil sensor
Others:	
Net weight:	163 kg

Company name:	Nhat Nhung Co., Ltd
Created by:	Tran Dinh Nhat
Phone:	0931770221
Email:	nhatmaybom@gmail.com
Date:	11/09/2018

98626289 SL1.100.100.55.A.4.50B.C 50 Hz

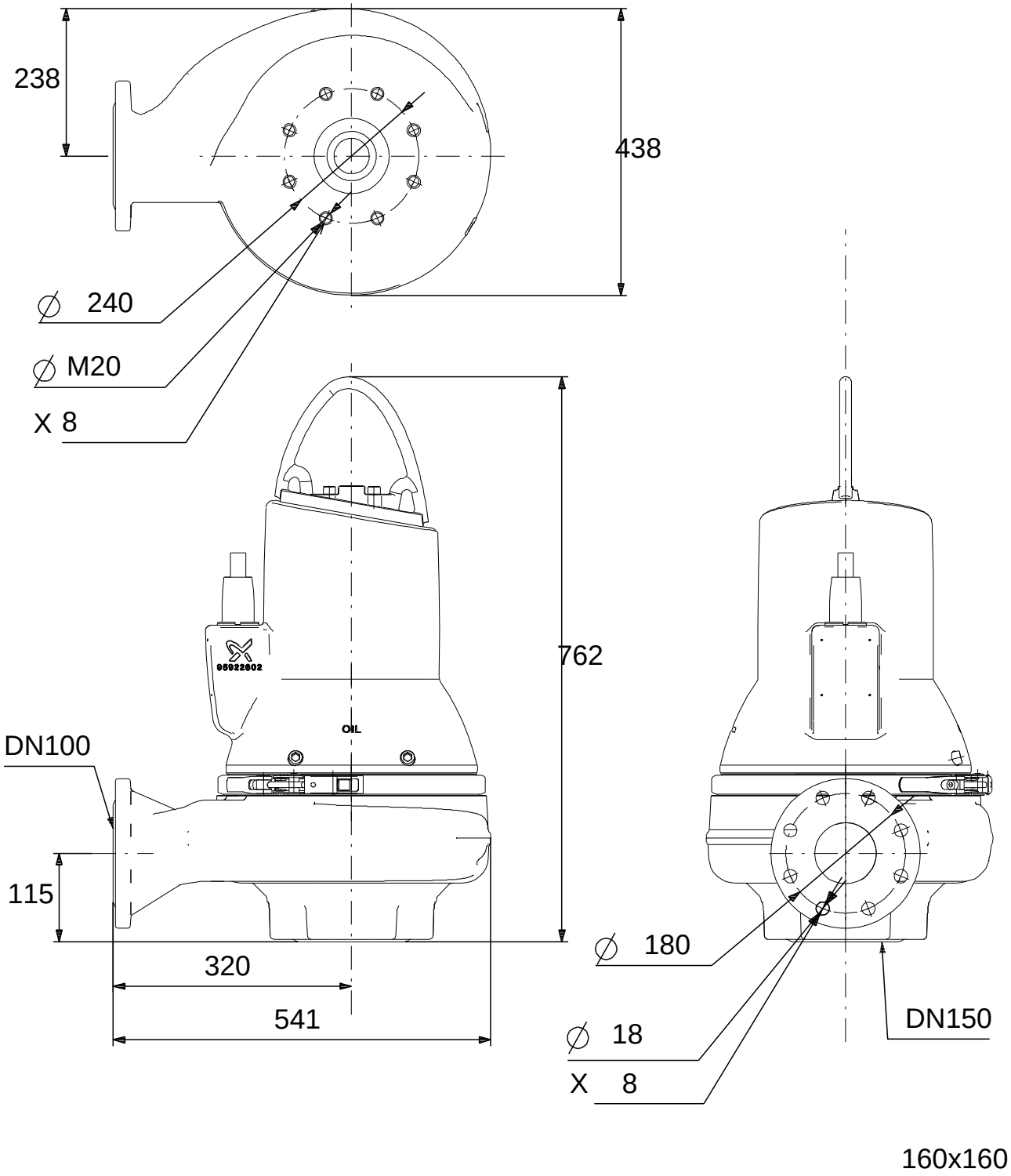

Note! All units are in [mm] unless others are stated.
Disclaimer: This simplified dimensional drawing does not show all details.

Company name: Nhat Nhung Co., Ltd
Created by: Tran Dinh Nhat
Phone: 0931770221
Email: nhatmaybom@gmail.com
Date: 11/09/2018

98626289 SL1.100.100.55.A.4.50B.C 50 Hz

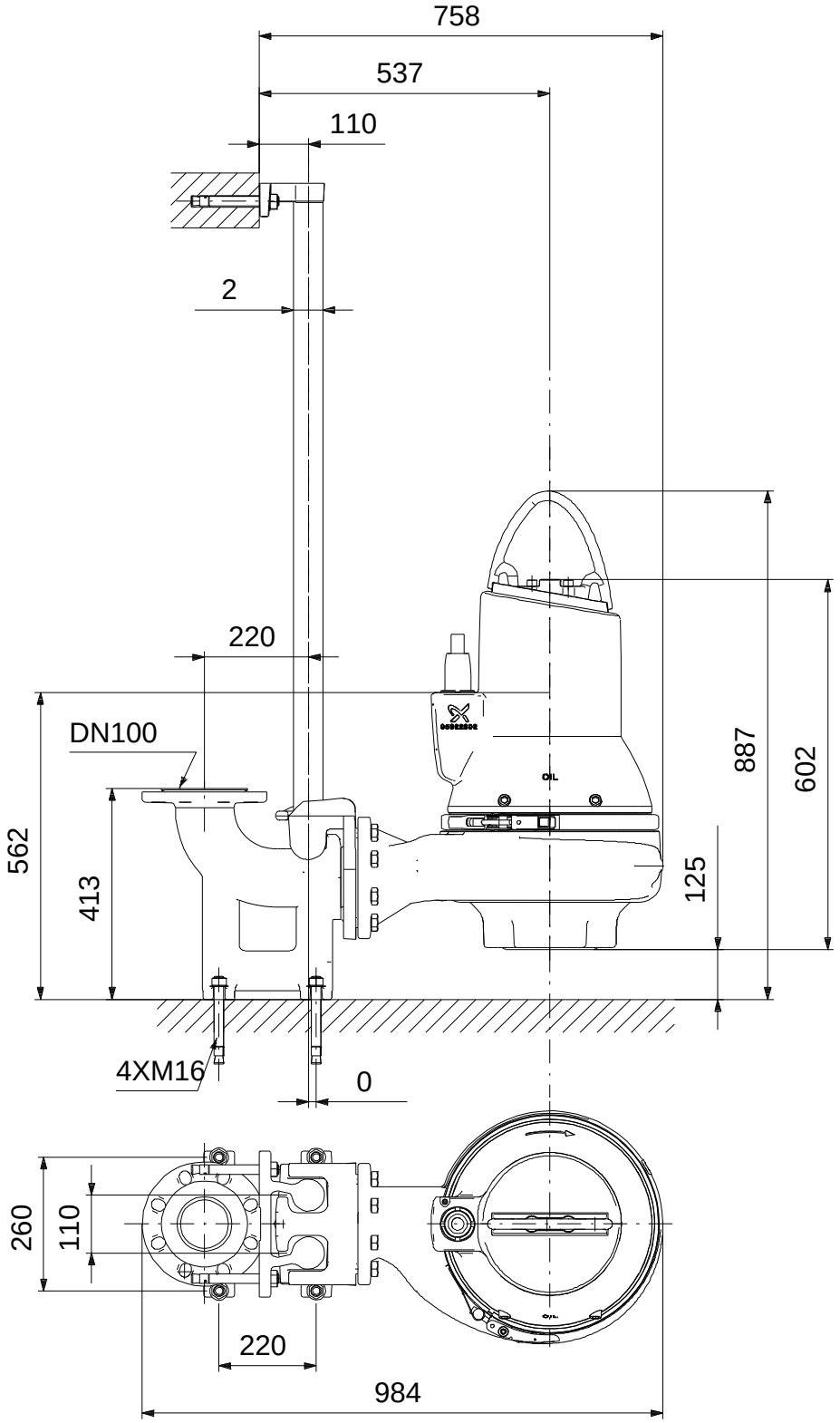

Note! All units are in [mm] unless others are stated.
Disclaimer: This simplified dimensional drawing does not show all details.

Company name: Nhat Nhung Co., Ltd
Created by: Tran Dinh Nhat
Phone: 0931770221
Email: nhatmaybom@gmail.com
Date: 11/09/2018

98626289 SL1.100.100.55.A.4.50B.C 50 Hz

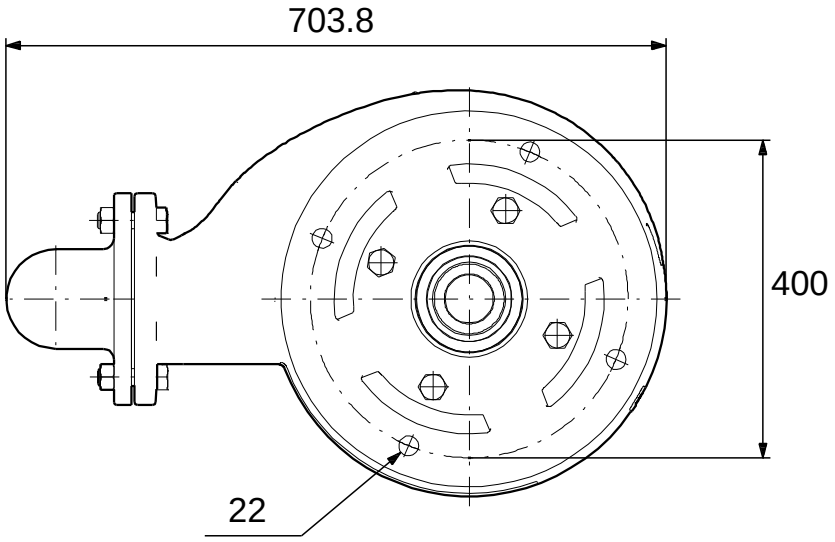

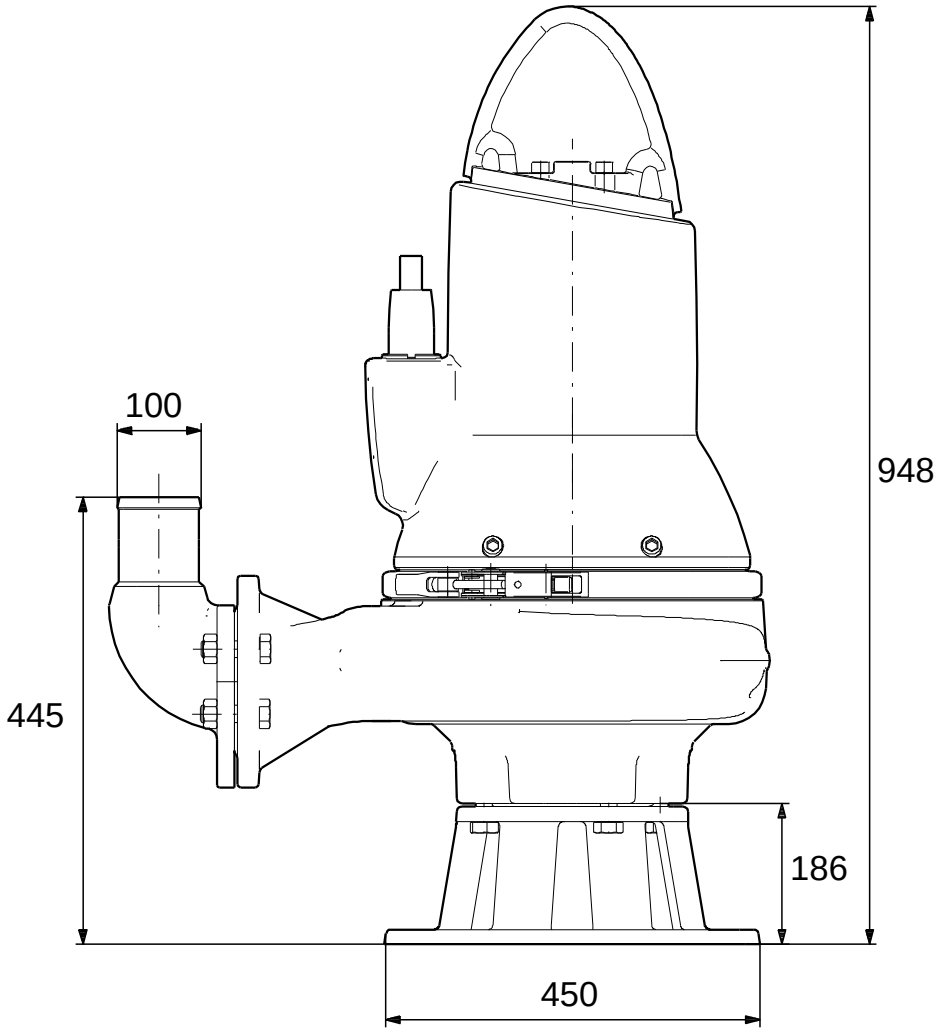

Note! All units are in [mm] unless others are stated.
Disclaimer: This simplified dimensional drawing does not show all details.